HYVA QUILL SHAFT

QUILL SHAFT

Hyva	Partno.:	021314002
	Gearbox:	ZF
Page 1 / 1		

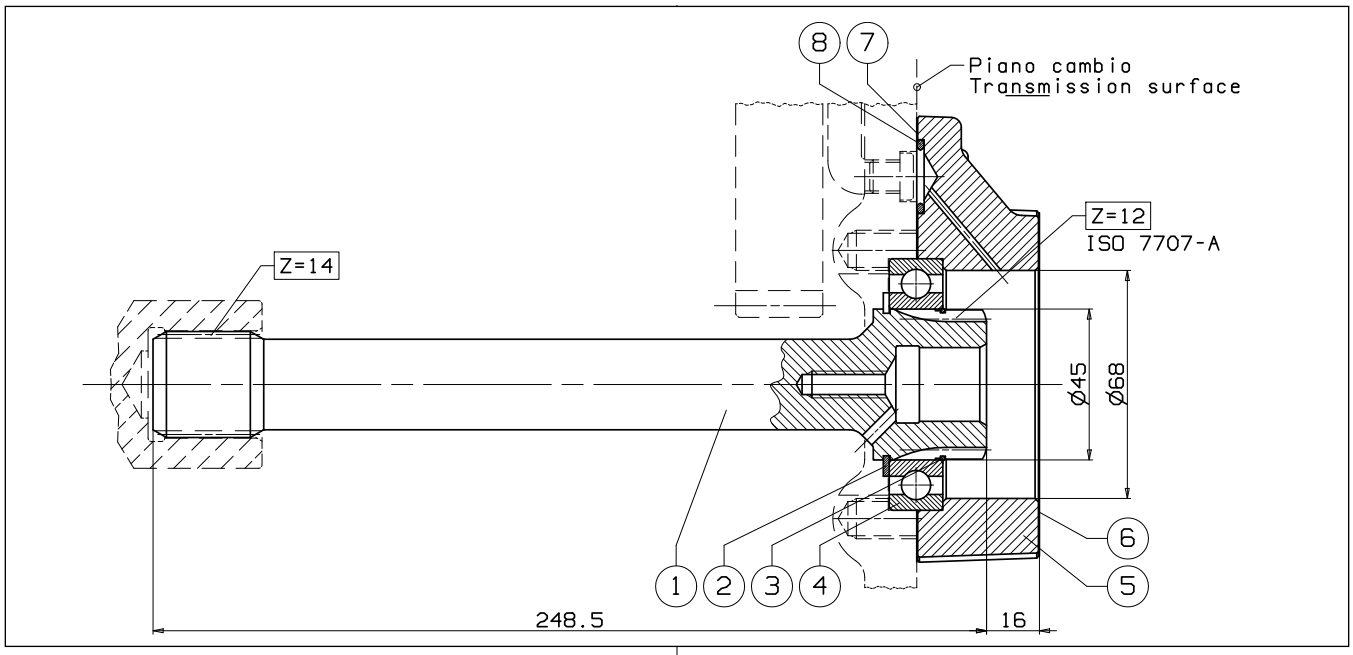

Parts list

No.	Partno.:	Description	Qty.
1		Quill shaft	1
2		Circlip E 45	1
3		Bearing back-up ring	1
4		Ball bearing 45x75x16	1
5		Bearing-holding flange	1
6		Gasket	1
7		Gasket	1
8		O-ring 3068	1

Type of Gearbox

ZF	ECOSPLIT 3 16S-151...16S-221 NEW ECOSPLIT 16S-1621...16S-2731+INTARDER

General informations

N.B. The TCE Ø 10x1 plug can be removed from the transmission to guarantee adequate lubrication for the PTOs that are working in demanding conditions (high power and turns and/or prolonged working times). In the shaft kit assembly phase, confirm the correct position of theO-R pos.8 and gasket pos.7